Experimental study on two-phase gas-liquid flow patterns at normal and reduced gravity conditions

ZHAO Jianfu (赵建福), XIE Jingchang (解京昌), LIN Hai (林 海) & HU Wenrui (胡文瑞)

National Microgravity Laboratory, Institute of Mechanics, Chinese Academy of Sciences, Beijing 100080, China
Correspondence should be addressed to Zhao Jianfu (email: jfzhao@imech.ac.cn)

Received January 31, 2001

Abstract Experimental studies have been performed for horizontal two-phase air-water flows at normal and reduced gravity conditions in a square cross-section channel. The experiments at reduced gravity are conducted on board the Russian IL-76 reduced gravity airplane. Four flow patterns, namely bubble, slug, slug-annular transition and annular flows, are observed depending on the liquid and gas superficial velocities at both conditions. Semi-theoretical Weber number model is developed to include the shape influence on the slug-annular transition. It is shown that its prediction is in reasonable agreement with the experimental slug-annular transition under both conditions. For the case of two-phase gas-liquid flow with large value of the Froude number, the drift-flux model can predict well the observed boundary between bubble and slug flows.

Keywords: **microgravity, two-phase gas-liquid flow, flow pattern, non-circular cross-section.**

Two-phase gas-liquid flows have wide applications both on Earth and in space. On Earth, they occur in a variety of process equipment, such as petroleum production facilities, condensers and re-boilers, power systems and core cooling of nuclear power plants during emergency operation. The space applications include active thermal control system, power cycle, storage and transfer of cryogenic fluids, and so on. Reliable design of such systems requires a thorough understanding of the mechanism of two-phase flow, such as the phase distributions (the flow patterns), the pressure drops and the heat transfer coefficients at different gas and liquid flow rates. Due to their important influences on pressure drop, heat and mass transfer, the flow patterns and their transitions are always an important topic in the field of two-phase gas-liquid flow.

With the aid of numerous meticulous experiments, our present knowledge of the mechanism controlling the flow pattern transitions has been built. It is, however, far from complete due to the complicated influence of gravity which is a dominant factor under normal gravity condition. Under low and microgravity conditions, due to the weakening or removal of the gravity, two-phase flows are essentially much simpler than those at normal gravity. Therefore, a study of two-phase flow at low and microgravity will be conductive to revealing the mechanism underlying the flow pattern transitions, and then to developing more mechanistic models for the flow pattern transitions of two-phase flows both on Earth and in space. This advantage and the requirements of space applications have stimulated studies on two-phase flows in reduced gravity conditions in the past decades[1]. The ideal location to conduct these studies is aboard a space station or in an orbiting space shuttle. However, due to the high cost and limited accessibility, most of the experiments on two-phase flow under reduced gravity conditions are performed using the drop tower fa-

cilities or parabolic flights of airplanes. There are also simulations of the microgravity two-phase flow in the ground-based experiments, using the neutral buoyancy method and the two-phase capillary flow system.

The test cross-sections used in the reduced gravity experiments are usually circular. However, non-circular cross-section may be more important. Their circumferences in proportional to the cross-sectional area are better than that of a circular tube, and then a higher heat transfer rate is possible. Wölk et al.[2] studied the air-water flows through circular and non-circular tubes of about 6-mm hydraulic diameter under low gravity condition (using the drop tower) and normal gravity condition. Three flow patterns, namely bubble, slug and churn flow, were identified in the vertical upward two-phase flows at normal gravity, while two flow patterns, namely bubble and slug flow, were identified at low gravity.

In the present paper, two-phase air-water horizontal flows in a square channel under normal and reduced gravity conditions are studied. The overall objectives of this study are to investigate the influences of gravity and cross-section shape on the occurrences of two-phase flow patterns and the flow pattern transitions in a square channel.

1 Experimental facility

The experimental facility was developed for microgravity experiments aboard the Russian IL-76 reduced gravity airplane as well as for experiments under terrestrial condition. A schematic diagram of the experimental apparatus is given in fig. 1.

Water and air were used as the experimental mediums. Water was pumped in a closed loop from the separator to the test section and back to the separator. Water flow rate was varied by adjusting the flow control valve, and was measured using a mass flowmeter with a range of 0—1500 kg/h and an accuracy of 0.15% FS (full scale). It can also be used to measure the temperature of the fluid. Air was stored in an 8-liter compressed air tank under the initial pressure of 6 MPa. After the pressure regulator the air pressure was reduced to 0.5 MPa. The outlet of the pressure regulator is connected to one of the two circuits for controlling/measuring the gas flow rate. Each circuit consists of a mass flow controller and a solenoid valve. The mass flow controllers have ranges of 0—100 SLM (standard liters per minute) and 0-10 SLM, respectively. The accuracy was 1.5% FS (full scale) for both mass flow controllers. When air mass flow rates were higher than 10 SLM, the first circuit was open and the first mass flow controller was used, while the second one was closed. Otherwise, the second mass flow controller was used. After passing the separator unit, air is vented to the airplane cabin.

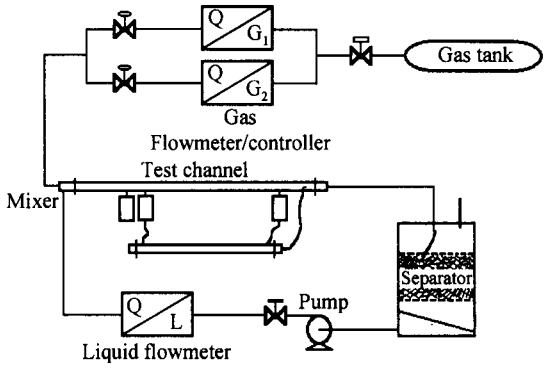

Fig. 1. Scheme of the experimental facility.

The air-water two-phase mixture was supplied through the mixer, where the air is injected radically into water from 54 small holes located uniformly around the periphery of an inner pipe. The outlet of the mixer has the same geometrical shape as the test section with a cross-sectional area of 12 × 12 mm^2. The horizontal test section has a length of 960 mm. The inner wall of the test section is made of transparent plexiglas. The observation window is located

640 mm from the mixer outlet and is 150 mm long. The air-water two-phase flow patterns were recorded by a video camera operating at a shutter speed of 1/4000s to reduce the blur in the image. Absolute pressure was measured at a distance of 180 mm from the mixer outlet. Two differential pressure measurements were taken at 300 and 810 mm downstream from the mixer outlet. All of the pressure readings were taken using pressure transducers with an accuracy of 0.25% FS. The absolute pressure transducer works in a range of 0—300 kPa, and the working ranges for both differential pressure transducers are 0—20 kPa. The other sides of the differential pressure transducers were connected to a downstream-facing Pitot tube, which was filled with water and connected to the test tube 80 mm upstream the outlet of the test section. As the system pressure changes, the transducers are equally offset and remain in range. The pressure drop then can be calculated using the difference between the differential pressure transducers.

2 Results and discussion

2.1 Flow patterns

The conditions for normal and reduced gravity experiments are all listed in table 1. The flow patterns were discerned based on the visual observation of a video tape reply. In accordance with the accepted terminology, four flow patterns, namely bubble, slug, slug-annular transition and annular flows, were obtained in the studied ranges of the gas and liquid flow rates under both normal and reduced gravity conditions (figs. 2 and 3). No stratified flow was observed in the present experiments of two-phase gas-liquid horizontal flow at normal gravity.

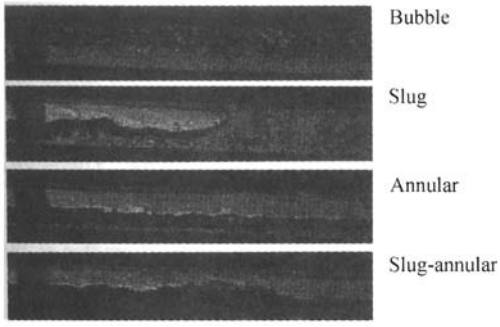

Fig. 2. Observations of the flow patterns at normal gravity condition.

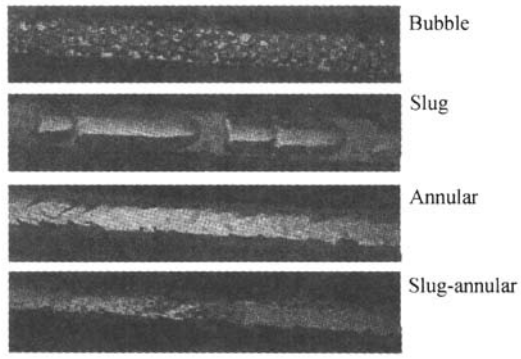

Fig. 3. Observations of the flow patterns at reduced gravity condition.

Table 1 The conditions for normal and reduced gravity experiments

U_{SG}/ms^{-1}	U_{SL}/ms^{-1}	Pressure/kPa	Temperature/℃	Gravity
0.08—6.73	0.32—1.89	107—287	29.4—50.8	1 g
0.12—7.99	0.16—1.06	81—284	34.2—44.9	< 0.04 g

There is an obvious difference between flow patterns of two-phase flow under normal and reduced gravity conditions. The flow structure of two-phase flow under reduced gravity condition is essentially symmetrical with respect to the center of channel. In contrast, the gas phase usually appears in the upper part of the test channel due to the action of the gravity. A typical difference is observed in slug flow. Under reduced gravity condition, the elongated gas bubble (Taylor bub-

ble) usually appears at the center of the test tube. The nose has a spherical or slightly pronounced conical shape with a smooth gas-liquid interface, while the interface of the elongated gas bubbles at normal gravity condition is often rough. There exist some large irregular waves on the gas-liquid interface.

The structure of slug-annular transitional flow is similar to that of annular flow. But there occasionally exist some frothy structures in the channel, which block the gas core to form intermittent structures. It is controversial whether slug-annular transitional flow is one of the basic flow patterns of two-phase flow or not. In the following discussion, it is considered as the transition between slug and annular flows.

2.2 Bubble-slug transition

In the literature, the drift-flux model[3] is usually used to determine the gas velocity with respect to the mixture for bubble and slug flows:

$$U_G = C_0 U_M + U_0, \tag{1}$$

where $U_G = U_{SG}/\varepsilon$ and $U_M = U_{SG} + U_{SL}$ denote the averaged velocity of the gas phase and the mixture velocity, respectively; ε, U_{SG} and U_{SL} denote respectively the gas void fraction, the gas superficial velocity and the liquid superficial velocity; C_0 and U_0 are two empirical parameters to be determined by experimental results. The gas distribution parameter C_0 usually has the same value for bubble and slug flows. It is shown by experiments and numerical simulations[4,5] that the value of C_0 is approximately equal to 1.2 for two-phase flow in circular tubes under different gravity conditions. U_0 is the gas averaged velocity in the case where zero flux occurs in the channel. Its relationships with other factors are different for bubble or slug flows[6]. The two parameters depend upon the density of the gas and liquid phases, the gravity level, the incline angle and the diameter of channel, the viscosity of the gas and liquid phases, the velocity, and so on.

There is no local velocity slip between the gas and liquid phases at microgravity. Therefore, $U_0 \approx 0$. For two-phase horizontal flow under normal gravity condition, experiments[7] showed that $U_0 \approx 0$ if the Froude number $Fr = U_M/\sqrt{gD} > 3.5$ (where D denotes the inner diameter of the channel). In these cases, (1) can be rewritten as

$$U_{SL} = \frac{1 - C_0\varepsilon}{C_0\varepsilon} U_{SG}. \tag{2}$$

Several mechanisms have been proposed to explain the bubble-slug transition of two-phase flows. Experiments on two-phase flow at reduced gravity condition indicated that the basic mechanism controlling the transition from the bubble flow to the slug flow is the coalescence between bubbles. The rate of coalescence depends on the bubble packing or the gas void fraction. Therefore, there should be a critical void fraction above which the structure of two-phase flow will transit from bubble to slug. Thus, (2) can express the transitional condition if the void fraction ε is replaced by the critical void fraction ε_c. This model is then called the drift-flux model or the void fraction model.

Colin et al.[9] defined a transitional quality as

$$X_C = C_0\varepsilon_c. \tag{3}$$

Based on several experiments of two-phase flow through circular pipes under reduced gravity conditions, they proposed an empirical relationship

$$X_C \approx 0.54, \text{ for } Su < 1.5 \times 10^6, \tag{4a}$$

$$X_C \approx 0.24, \text{ for } Su < 1.7 \times 10^6, \tag{4b}$$

where $Su = \sigma D/\rho_L \nu_L^2$ denotes the Suratman number; σ, ρ_L and ν_L denote the surface tension, the density and viscosity of the liquid phase, respectively. In the present experiments, the Suratman number $Su \approx (1.95 \pm 0.35) \times 10^6$, which is just located at the gap. So it is difficult to determine the value of the transitional quality X_C using this empirical relationship.

However, Jayawardena et al.[10] proposed an alternative empirical bubble-to-slug transition criterion based on approximately the same experimental data as used by Colin et al.[9]. By rearranging this criterion, the following relationship is obtained:

$$X_C = K_1 \frac{v_G}{v_L} \Big/ \left(K_1 \frac{v_G}{v_L} + Su^{2/3} \right), \tag{5}$$

where v_G denotes the gas viscosity, and the empirical parameter $K_1 = 464.16$. According to this alternative relationship, the value of the transitional quality is taken as $X_C = 0.45 \pm 0.03$. It is in reasonable agreement with the empirical value of $X_C = 0.44$, obtained from the experimental data of the bubble-slug transition at reduced gravity condition.

Taking into account the rising velocity of gas bubbles under normal gravity condition, a drift-flux model for predicting the bubble-slug transition in vertical upward two-phase flows has also been found. However, it is scarcely used for predicting the same transition in horizontal two-phase flows. The major reason may be that the law of U_0 is not very clear. According to Bendiksen[7], eq. (2) still holds for the horizontal two-phase flow near the bubble-to-slug transitional boundary in the case of $Fr > 3.5$. Thus one can expect that the drift-flux model is also able to predict the bubble-slug transition at normal gravity. Since the gas phase is crushed and shifted to the upper part of the test tube at normal gravity due to the action of the gravity, the local void fraction may be larger than the critical value, and coalescence will occur at small sectional averaged void fraction. Therefore, the transitional quality may decrease. As is actually shown in fig. 4, the drift-flux model with the value of the transitional quality $X_C = 0.26$ is in reasonable agreement with the experimental bubble-slug transition for the case of $Fr > 3.5$ at normal gravity condition. This value is approximately half that under reduced gravity condition (fig. 4).

Assume that the value of the critical void fraction is approximately a constant in the process of local coalescence. Then the critical value of the sectional averaged void fraction will be depending on the gas relative area (φ in the channel. Since the change in the gas distribution parameter is small under different gravity conditions, the transitional quality is in direct proportion to φ, namely $X_C = \varphi X_{C0}$(where X_{C0} denotes the transitional quality at microgravity condition). In the present experiments we observed that the low boundary of the gas phase near the bubble-slug transitional boundary at normal gravity condition is approximately located at the center of the channel. Then the gas relative area φ in the channel approximates to 1/2, as is verified by values obtained from the experimental data. Therefore, the basis of the bubble-slug transition for the large Froude number two-phase flow under normal gravity condition is also the coalescence between bubbles. The experiments on two-phase flow at microgravity condition can provide guidance for determining the transitional quality at different gravity conditions.

For the case of $Fr < 3.5$, the unclearness of the law of U_0 is the major obstruction to the application of the drift-flux model, which should be one of the major subjects in the future.

2.3 Slug-annular transition

In the literature, many models on the slug-annular transition of two-phase gas-liquid flow

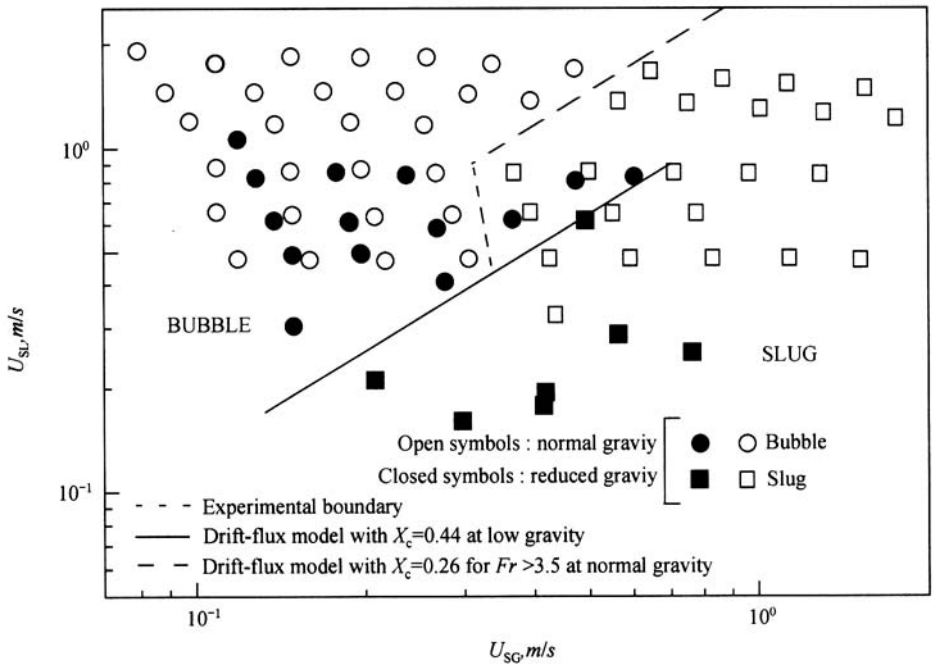

Fig. 4. Bubble-slug transition at normal and reduced gravity conditions.

have been suggested. Among them, the models for predicting the slug-annular transition of two-phase flow at microgravity can be classified into three categories[1]: the void fraction matched model, the force-balance model (or the Weber number model), and the stability model. The semi-theoretical Weber number model proposed by Zhao & Hu[11] is more accurate over a rather wide range of working fluids and experimental conditions than others. Its predictions also agree well with the experimental data obtained from the experiments on Earth in which the equi-density immiscible liquid-liquid systems or gas-liquid flow in mine-scale capillary tubes are used to simulate two-phase gas-liquid flow under microgravity conditions. Thus the semi-theoretical Weber number model is proved to give a proper expression to the mechanism controlling the slug-annular transition. However, this model ought to be further developed in order to take into account the influence of the cross-section shape of the channel.

The semi-theoretical Weber number model assumes that the basic mechanism controlling the transition is the imbalance between the impulsive force due to the gas inertia and the surface tension force. Taking into account the averaged relative motion between the gas and liquid phases and the difference between the geometry of circular and square cross-sectional channels, the impulsive force due to the gas inertia in the present case can be expressed as

$$F_I = D^2 \rho_G U_{SG} (U_G - U_L), \tag{6}$$

where D denotes the length of the cross-sectional side of the test tube. The surface tension force acting on the gas-liquid interface is expressed as

$$F_S = 2\pi R_B \sigma, \tag{7}$$

where R_B and σ denote the radius of the gas core or that of the nose of elongated gas bubble near the transition and the surface tension, respectively. Based on a simple geometry consideration, there exists approximately the following relationship between R_B and D:

$$\pi R_B^2 / D^2 = \varepsilon. \tag{8}$$

Assuming that the drift-flux relationship, i.e. eq. (2), is also valid for slug flow near the boundary of the slug-annular transition, the slug-annular transitional criteria can be expressed as

$$U_{SG} = \sqrt{\frac{2\sqrt{\pi}\kappa C_0 \sigma \varepsilon^{3/2}(1-\varepsilon)}{(C_0-1)\rho_G D}}, \tag{9}$$

$$U_{SL} = \frac{1-C_0\varepsilon}{C_0\varepsilon}U_{SG}, \tag{10}$$

where κ is an empirical parameter of an order of 1, which denotes the ratio between the impulsive force due to the gas inertia and the surface tension force at the transitional boundary.

Using the definitions of the gas and liquid superficial Weber numbers $We_{SI} = \rho_I U_{SI}^2 D/\sigma$ (where the subscript $I = G$ or L, which denote the gas or liquid phase), the above criteria can be rewritten in a dimensionless form,

$$We_{SG} = \frac{2\sqrt{\pi}\kappa C_0 \varepsilon^{3/2}(1-\varepsilon)}{(C_0-1)}, \tag{11}$$

$$We_{SL} = \left(\frac{1-C_0\varepsilon}{C_0\varepsilon}\right)^2 \frac{\rho_L}{\rho_G} We_{SG}. \tag{12}$$

Compared with those for the case of circular tubes[11], the constant on the right side of (9) and (11) is now changed from 4 to $2\sqrt{\pi}$ due to the geometry difference.

The prediction of the above model and the data of the experiments under normal and reduced gravity conditions are all plotted in fig. 5. The value of the empirical parameter κ is taken as 1, and the value of the gas distribution parameter C_0 is taken as 1.35 for the square channel according to the experimental results of Wölk et al.[2]. Satisfactory is agreement between the prediction and the flow pattern data obtained at normal and reduced gravity conditions. Thoroughgoing anal-

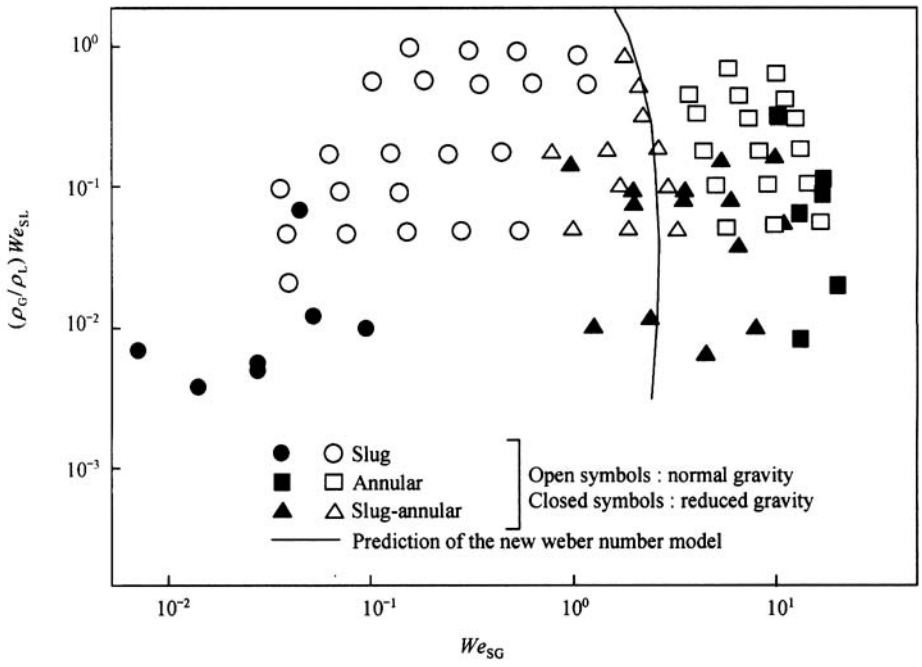

Fig. 5. Slug-annular transition at normal and reduced gravity conditions.

ysis shows that the Froude number is always larger than 6 near the slug-to-annular transitional boundary in the present experiments under normal gravity condition. Therefore, (2) also holds for these flows according to the experimental results of Bendiksen[7], as expected.

3 Conclusion

Experimental studies have been performed on horizontal two-phase air-water flows under normal and reduced gravity conditions in a square cross-section channel. The influences of gravity and cross-section shape on the occurrences of two-phase flow patterns and the flow pattern transitions in the square channel are studied. Four flow patterns——bubble, slug, slug-annular transition and annular flows——are observed under both conditions[8].

The semi-theoretical Weber number model is developed to include the cross-section shape influence on the slug-annular transition. Its prediction is in reasonable agreement with the experimental slug-annular transition under both conditions. Thus it is proved that the semi-theoretical Weber number model gives a proper expression to the mechanism controlling the slug-annular transition.

Analysis of the bubble-slug transition shows that the basic mechanism underlying the transition from the bubble flow to the slug flow is the coalescence between bubbles. In the case of two-phase gas-liquid flow with large value of the Froude number, the drift-flux model can predict well the observed boundary between bubble and slug flows. The transitional quantities under different gravity conditions are in direct proportion to gas relative area φ in the channel and the transitional quantities under microgravity condition. The experiments on two-phase flow at microgravity condition lay a foundation for determining the transition parameters under different gravity conditions. However, for the case of $Fr < 3.5$, much more work is needed.

Acknowledgements This work was supported by the National Natural Science Foundation of China (Grant No. 19789201) and the Ministry of Science and Technology of China (Grant No. 95-Yu-34). The authors wish to gratefully acknowledge the invaluable assistance of Profs. Y. H. Zhang and C. M. Lü of General Establishment for Space Science and Applications of CAS.

References

1. Zhao, J., A review of two-phase gas-liquid flow patterns under microgravity conditions, Advances in Mechanics, 1999, 29(3): 369.
2. Wölk, G., Dreyer, M., Rath, H. J., Investigation on two-phase flow in small diameter non-circular channels under low and normal gravity, In Space Technology & Applications International Forum-1999, Albuquerque, NM: AIP-Conference 458, S785—S791.
3. Zuber, N., Findlay, J.A., Average volumetric concentration in two-phase flow systems, J. Heat Transfer, 1965, 87: 453.
4. Fabre, J., Liné, A., Modeling of two-phase slug flow, Ann. Rev. Fluid Mech., 1992, 24: 21.
5. Hewitt, G. F., Multiphase flow: the gravity of the situation, In 3rd Microgravity Fluid Physics Conf., July 13-15, Cleveland, Ohio, USA.
6. Mishima, K., Ishii, M., Flow regime transition criteria for upward two-phase flow in vertical tubes: Int. J. Heat Mass Transfer, 1984, 27(5), 723.
7. Bendiksen, K. H., An experimental investigation of the motion of long bubbles in inclined tubes: Int. J. Multiphase Flow, 1984, 10: 467.
8. Dukler, A.E., Fabre, J.A., McQuillen J.B. et al., Gas-liquid flow at microgravity conditions, flow patterns and their transitions. Int. J. Multiphase Flow, 1988, 14(4): 389.
9. Colin, C., Fabre, J., McQuillen, J., Bubble and slug flow at microgravity conditions: state of knowledge and open questions. Chem. Eng. Comm., 1996, 141/142: 155.
10. Jayawardena, S.S., Balakotaiah, V., Witte, L. C., Flow pattern transition maps for microgravity two-phase flow, AIChE J., 1997, 43(6): 1637.
11. Zhao, J. F., Hu, W. R., Slug to annular flow transition of microgravity two-phase flow, Int. J. Multiphase Flow, 2000, 26: 1295.